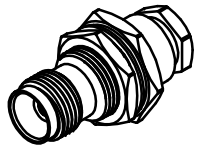

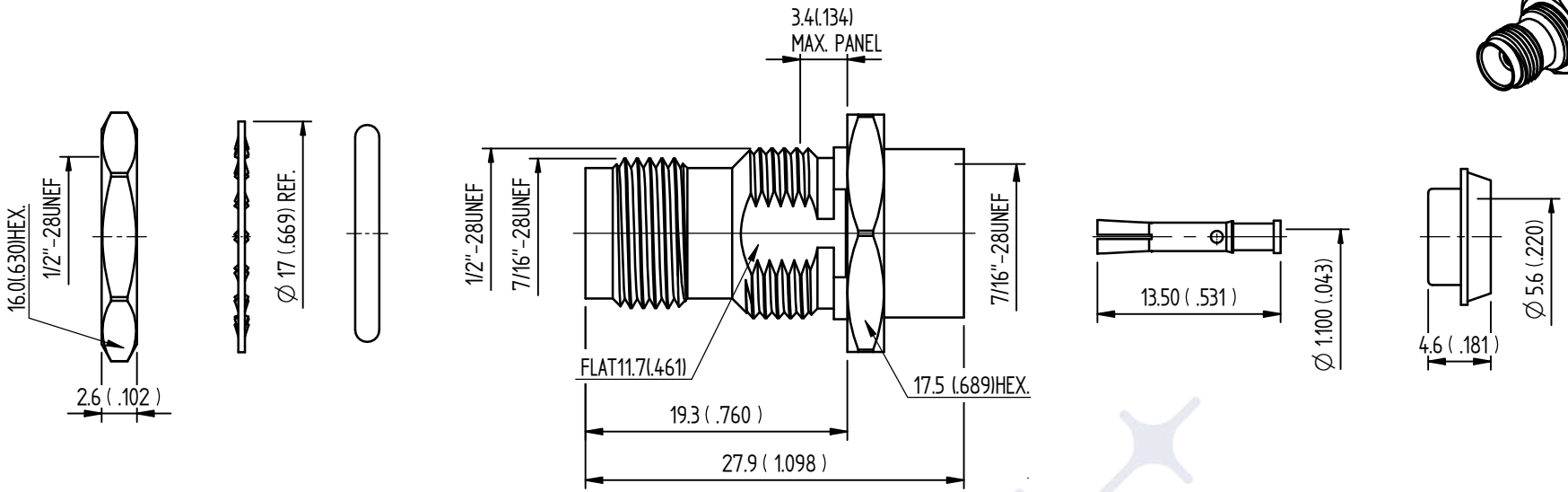

1.0 ELECTRICAL
- 1.1 FREQUENCY RANGE: DC-11 GHz
- 1.2 NOMINAL IMPEDANCE: 50 OHMS
- 1.3 VOLTAGE RATING: 500 VOLTS MAX.
- 1.4 VSWR: 1.3 MAX.

2.0 MATERIALS
- 2.1 BODIES: BRASS PER JIS-C3604
- 2.2 CENTER CONTACT: BERYLLIUM COPPER PER ASTM B196 UNS C17300
- 2.3 INSULATION: TEFLON PER ASTM D1457 AND ASTM D1710

3.0 FINISHES AND OTHERS
- 3.1 SEE BELOW TABLE FOR DETAILS.

4.0 MECHANICAL
- 4.1 INTERFACE IN ACCORDANCE WITH: MIL-STD-348B
- 4.2 FOR USE WITH RG142 OR SIMILAR STYLE CABLE
- 4.3 CABLE ATTACHMENT: OUTER: CLAMP, INNER: SOLDER

5.0 ENVIRONMENTAL
- 5.1 OPERATING TEMPERATURE RANGE: -65° C TO +165° C

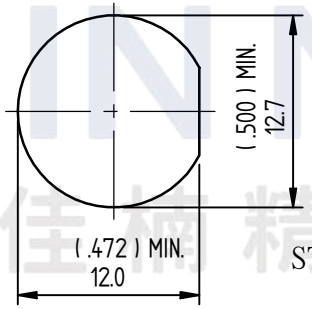

MOUNTING HOLE

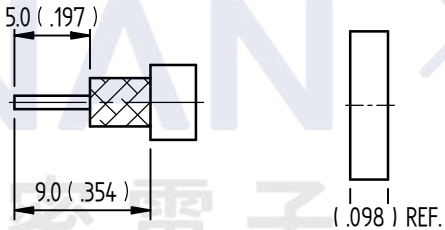

STRIPPING DIMENSION

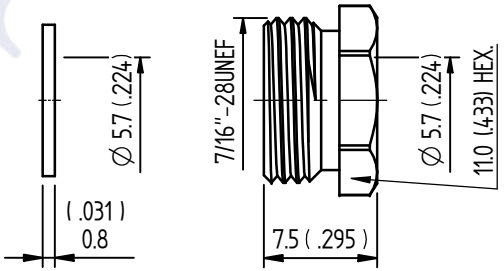

NO	DESCRIPTION	MATERIAL	Q'TY	FINISH
11	O-RING	SILICONE	1	BLACK
10	WASHER	STEEL	1	NICKEL 100 μ" MIN.
9	NUT	BRASS	1	NICKEL 100 μ" MIN.
8	NUT	BRASS	1	NICKEL 100 μ" MIN.
7	WASHER	BRASS	1	NICKEL 100 μ" MIN.
6	GASKET	SILICONE	1	RED
5	BRAID CLAMP	BRASS	1	NICKEL 100 μ" MIN.
4	CENTER CONTACT	BERYLLIUM COPPER	1	GOLD 3 μ" MIN.
3	INSULATION	TEFLON	1	NONE
2	WASHER	BRASS	1	NICKEL 100 μ" MIN.
1	BODY	BRASS	1	NICKEL 100 μ" MIN.

DESCRIPTION	TNC STRAIGHT BULKHEAD JACK CLAMP								
製圖	DRAWN Leona	TOLERANCE		品名 TITLE	40150208109002 \ROHS COMPLIANT	142U (50Ω)	日期	DATE 05.28.19'	版次 REV. A-0
		.X	±0.2						
檢圖	CHECK Amy	.XX	±0.1	單位	UNIT mm(in)	DWG.NO.	15-0287		
認定	APPROVAL Jenny	.XXX	±0.05	比例	SCALE 2:1	佳楠精密電子股份有限公司 CHIN NAN PRECISION ELECTRONICS CO.,LTD.			
		ANGLE	± 5°						

BE A SPARK CHIN NAN 佳楠精密電子